A & M Electric Tools

Ind	Product No.	Type	Voltage	Country
a	4000384063	PPH24E	220-240V	IN2

Rotary Hammers

Milwaukee

PPH 24 E

Exp.view No.	Version	Date	Page
4926 3840 65	0005	02.09.04	1/3

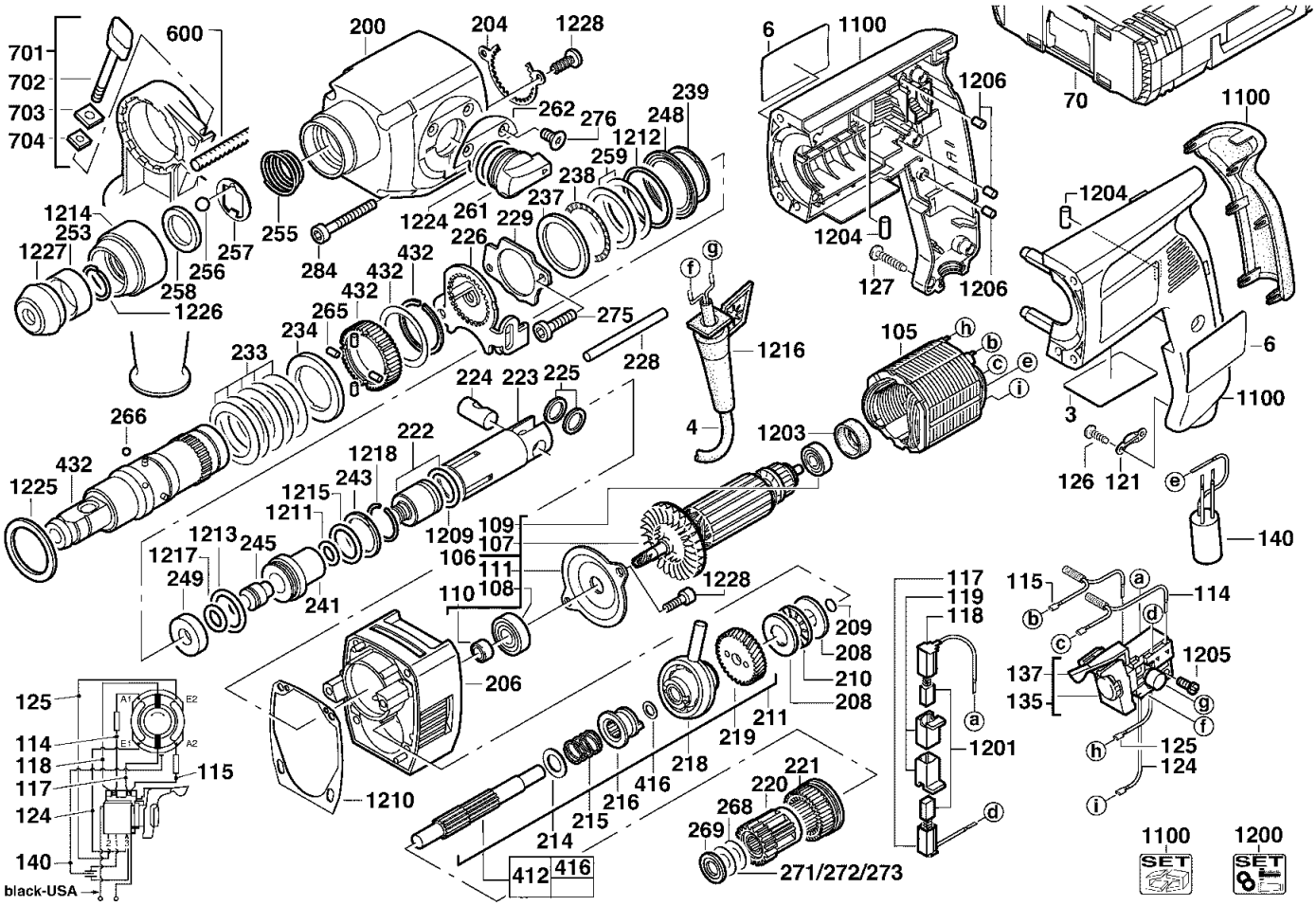

Pos	Index	Quanti	Article No.	Designation
0003	a	1	4931384068	RATING PLATE
0004	a	1	4931302112	CONNECTION CABLE
0006	a	1	4931378806	TYPE PLATE
0070	a	1	4932378986	CARRYING CASE
0105	a	1	4931301856	ELECTRIC FIELD
0106	a	1	4931343020	ARMATURE
0107	a	1	4931342643	FAN
0108	a	1	4931623188	BALL BEARING
0109	a	1	4931901253	BALL BEARING
0110	a	1	4931382148	SEALING SLEEVE
0111	a	1	4931267585	BEARING COVER
0114	a	1	4931623023	CHOKING COIL
0115	a	1	4931622291	CHOKING COIL
0117	a	1	4931271665	BRUSH HOLDER
0118	a	1	4931622292	BRUSH HOLDER
0119	a	2	4931315039	BRUSH HOLDER
0121	a	1	4931256500	CABLE COLLAR
0124	a	1	4931253699	CABLE
0125	a	1	4931622262	WIRE
0126	a	2	4931624538	SCREW
0127	a	6	4931618253	SCREW
0135	a	1	4931382377	SWITCH BOARD
0137	a	1	4931344836	SWITCH LEVER
0140	a	1	4931622384	CAPACITOR
0200	a	1	4931382394	GEAR BOX
0204	a	1	4931331685	WASHER
0206	a	1	4931382381	BEARING END PLATE
0208	a	2	4931622575	AXIAL BEAR.WASHER
0209	a	1	4931941082	O-RING
0210	a	1	4931622567	AXIAL NEEDLE RING
0211	a	1	4931379284	REDUCT. GEAR SHAFT
0214	a	1	4931621983	DISC
0215	a	1	4931379589	PRESSURE SPRING
0216	a	1	4931379649	COUPLING SLEEVE
0218	a	1	4931379116	WOBBLE DRIVE
0219	a	1	4931387316	REDUCT GEAR WHEEL
0220	a	1	4931384917	PLANET GEAR
0221	a	1	4931331769	INTERN.GEARED WHE
0222	a	1	4931382168	PERCUSSION BODY
0223	a	1	4931379587	CYLINDER
0224	a	1	4931331623	CYLINDRICAL BOLT
0225	a	2	4931400589	WASHER
0226	a	1	4931331752	SLIDER
0228	a	1	4931623081	PIN

Repairs/modification and and testing of electric power tools are to be carried out by specialists. The safety regulations according to DIN/VDE/CEE/AFNOR and other regulations valid in the different countries are to be observed.

A & M Electric Tools

Ind	Product No.	Type	Voltage	Country
a	4000384063	PPH24E	220-240V	IN2

Rotary Hammers

Milwaukee

PPH 24 E

Exp.view No.	Version	Date	Page
4926 3840 65	0005	02.09.04	2/3

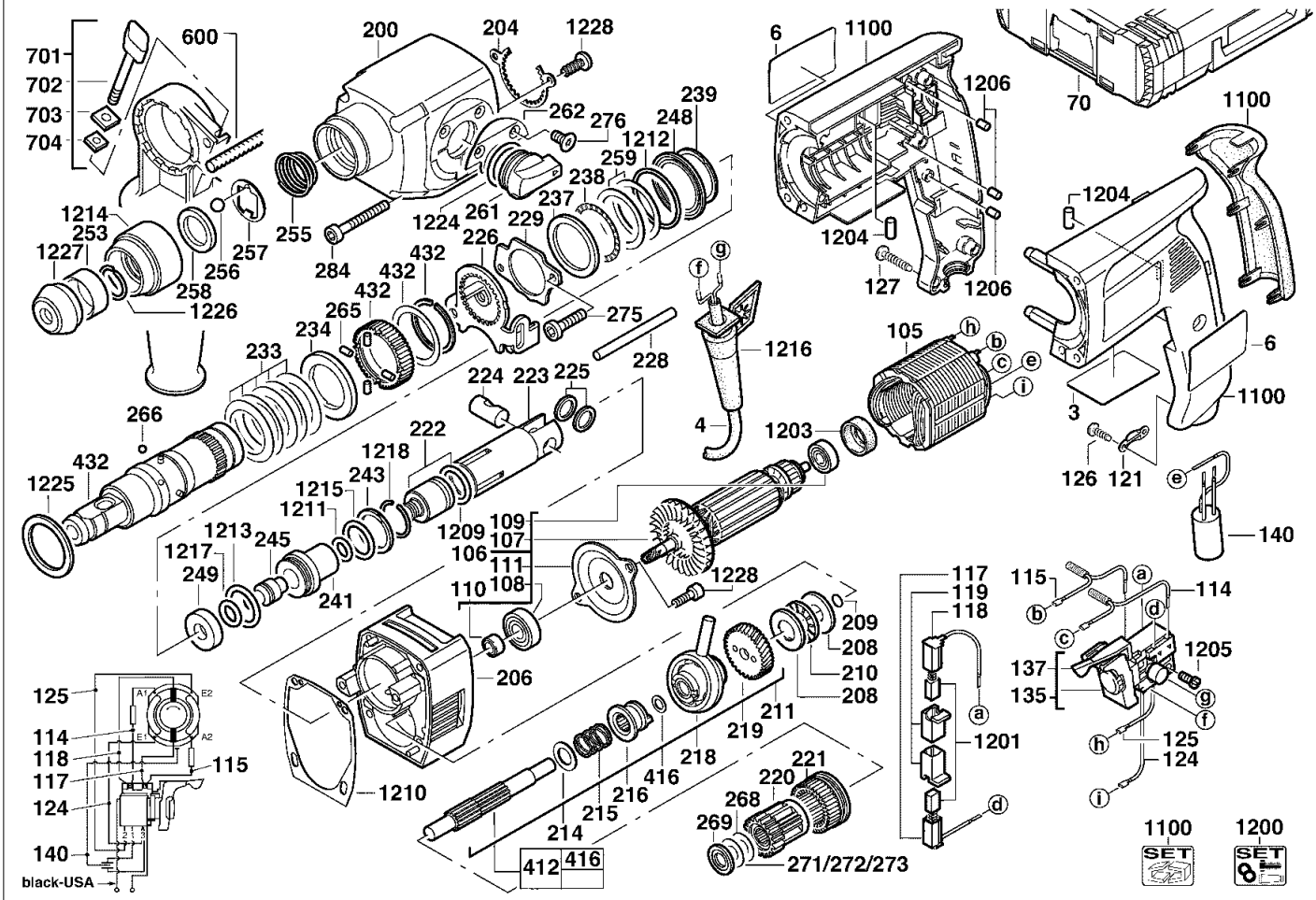

Pos	Index	Quanti	Article No.	Designation
0229	a	1	4931331787	LATCH PLATE
0233	a	5	4931379071	CUP SPRING
0234	a	1	4931379110	CLUTCH DISC
0237	a	1	4931623199	WASHER
0238	a	1	4931331713	THRUST BEARING
0239	a	1	4931343187	LOCKING WASHER
0241	a	1	4931387331	SLEEVE
0243	a	1	4931387338	THRUST COLLAR
0245	a	1	4931387329	SNAP DIE
0248	a	1	4931343049	WASHER
0249	a	1	4931382274	STOP WASHER
0253	a	1	4931360861	DISTANCE SLEEVE
0255	a	1	4931343128	PRESSURE SPRING
0256	a	1	4931911572	BALL
0257	a	1	4931343127	SUPPORT PLATE
0258	a	1	4931343126	HOLDING RING
0259	a	2	4931623200	WASHER
0261	a	1	4931392506	SWITCH HANDLE
0262	a	1	4931379108	LATCH PLATE
0265	a	4	4931624045	CYLINDER PULLEY
0266	a	4	4931805390	BALL
0268	a	1	4931624096	DISC
0269	a	1	4931379420	SPACER
0271	a	1	4931624098	DISC
0272	a	1	4931624097	DISC
0273	a	1	4931624096	DISC
0275	a	2	4931623260	SCREW
0276	a	2	4931379109	SCREW
0284	a	4	4931331734	SCREW
0412	a	1	4931384864	REDUCT. GEAR SHAFT
0416	a	1	4931624264	DISC
0432	a	1	4931384934	REPAIR KIT
0600	a	1	4931384434	DEPTH GAUGE
0701	a	1	4932373725	HANDLE
0702	a	1	4931254533	SCREW
0703	a	1	4931271221	CLAMPING PLATE
0704	a	1	4931614025	NUT
1100	a	1	4931359606	HOUSING
1200	a	1	4931379681	MAINTENANCE SET
1201	a	1	4931392609	CARBON BRUSH SET
1203	a	1	4931301483	RUBBER SLEEVE
1204	a	2	4931307423	HOLDING-DOWN DEVIC
1205	a	2	4931621772	SCREW
1206	a	3	4931271824	HOLDING-DOWN DEVIC

Repairs/modification and and testing of electric power tools are to be carried out by specialists. The safety regulations according to DIN/VDE/CEE/AFNOR and other regulations valid in the different countries are to be observed.

A & M Electric Tools

Ind	Product No.	Type	Voltage	Country
a	4000384063	PPH24E	220-240V	IN2

Rotary Hammers

Milwaukee

PPH 24 E

Exp.view No.	Version	Date	Page
4926 3840 65	0005	02.09.04	3/3

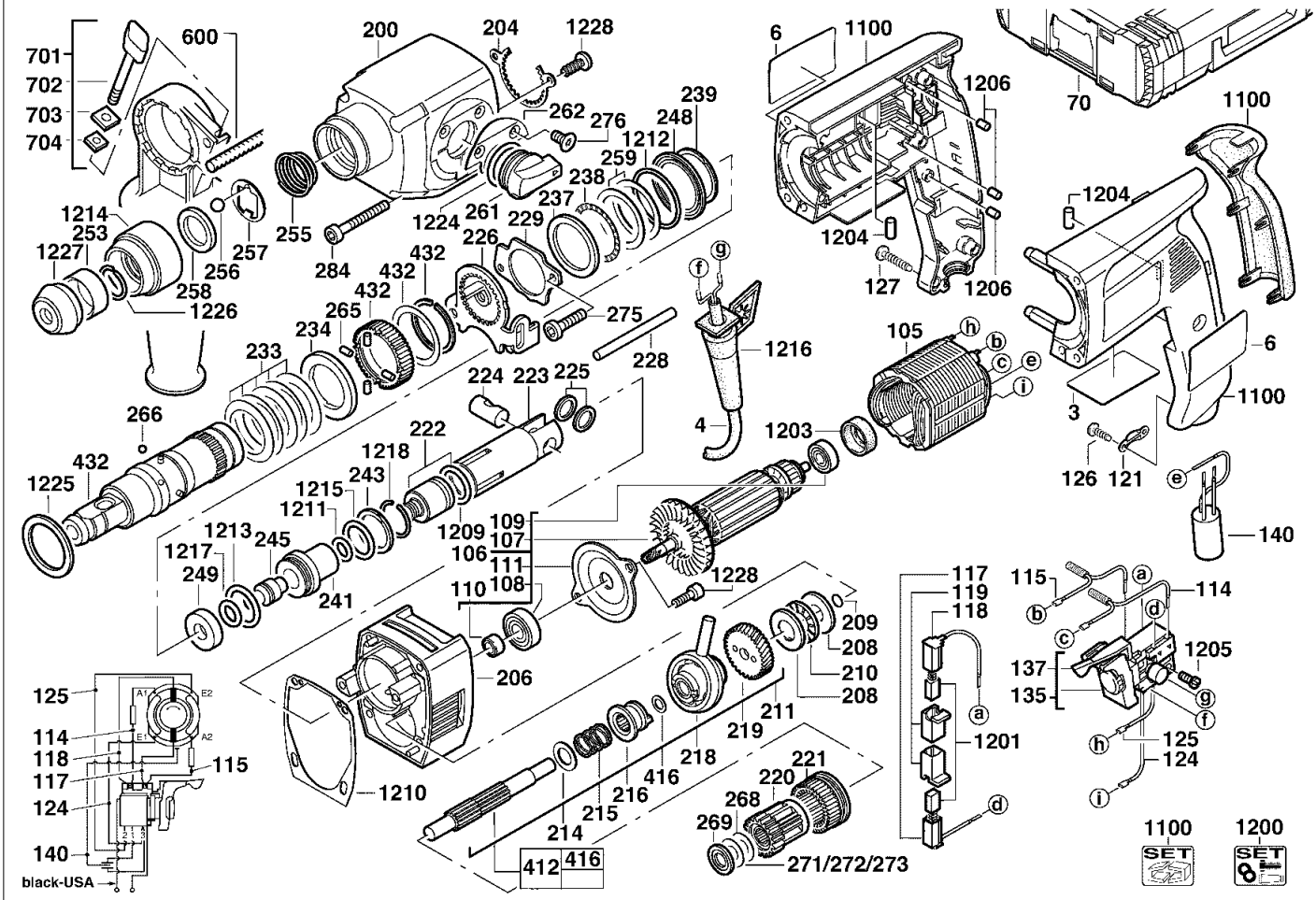

Pos	Index	Quanti	Article No.	Designation
1209	a	1	4931379705	SEAL RING
1210	a	1	4931331735	GASKET
1211	a	1	4931623468	RADIAL SEAL RING
1212	a	1	4931623135	O-RING
1213	a	1	4931623221	RADIAL SEAL RING
1214	a	1	4931343965	SLEEVE
1215	a	1	4931623616	SEAL RING
1216	a	1	4931332161	CABLE ENTRY SLEEVE
1217	a	1	4931624493	SEAL RING
1218	a	1	4931623636	RING
1224	a	1	4931623293	O-RING
1225	a	1	4931379585	FELT WASHER
1226	a	1	4931623220	SPRING RING
1227	a	1	4931343123	CAP
1228	a	4	4931379708	SCREW

Pos	Index	Quanti	Article No.	Designation

Repairs/modification and and testing of electric power tools are to be carried out by specialists. The safety regulations according to DIN/VDE/CEE/AFNOR and other regulations valid in the different countries are to be observed.